FORSTER PRODUCTS
310 E. LANARK AVENUE, LANARK, ILLINOIS 61046 PHONE: 815-493-6360 FAX: 815-493-2371 www.forsterproducts.com

User Instructions for the Datum Dial Ammunition Measurement System

(For Gathering Case, Bullet and Cartridge Length Data)

Issue 3

1.0 GENERAL INFORMATION

The Datum Dial Ammunition Measurement System is an easy-to-use and versatile tool that provides the data you need to refine your case sizing and bullet seating operations (Figure 1).

Your benefits from gathering and analyzing reloading component data are:

- **Better accuracy** because your ammunition's headspace is tailored to your firearms' chamber.
- **Safer shooting** because excessive headspace, which may lead to dangerous case separation, can be avoided.
- **Quick sorting** of batches of cases, bullets and cartridges to effectively remove variation to provide relative consistency.
- **More possible reloads** because of reduced work hardening of brass.

The core components are a body and three interchangeable dials that, when used in a repeatable manner with your caliper, are used to measure relative distances between selected points on cases, bullets and cartridges (Figure 2).

Figure 2. Datum Dial Ammunition Measurement System

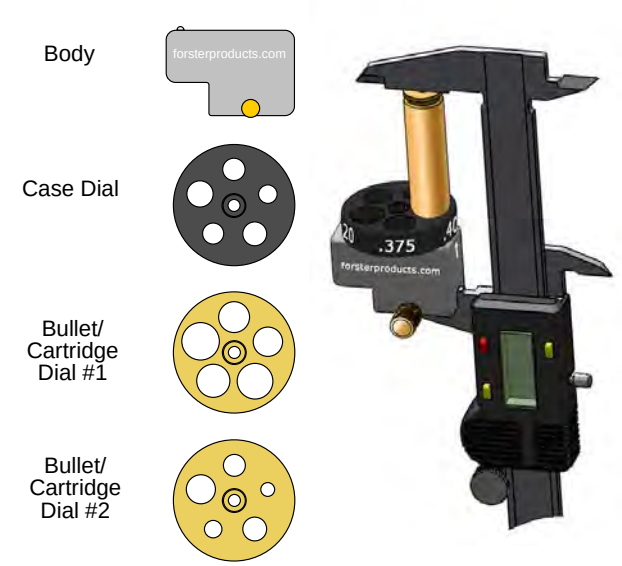

Figure 1. Datum Dial Ammunition Measurement System Uses

Relative Case Measurement

Provides a relative measurement (X) between the base of a case to a datum point on its shoulder angle. May be used:

- ***Before*** sizing operations to find the optimal headspace for your firearm (shown below and in Section 4.0).
- ***After*** sizing operations to check the set-up and/or consistency of your reloading process.

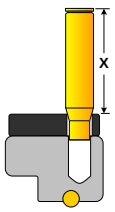

When this measurement is taken from several cases that have been fire-formed from the same firearm, and the total is averaged, it is called the "Optimal Rifle Chamber Headspace" for this particular firearm because it best fits the firearm's chamber.

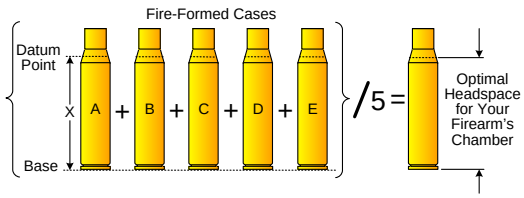

The "Optimal Rifle Chamber Headspace" measurement then allows you to adjust your sizing die to produce cartridges with a headspace fine-tuned for your particular firearm, ensuring that the cartridge is tailored to your firearm's chamber.

Relative Bullet or Cartridge Measurement

Provides a relative measurement (X) from the base of a bullet/cartridge to a point on the bullet's ogive, very close to the bullet's major diameter. May be used:

- ***Before*** seating operations check factory bullet/cartridge consistency (shown below and in Section 5.0).
- ***After*** seating operations to check the set-up and/or consistency of your reloading process.

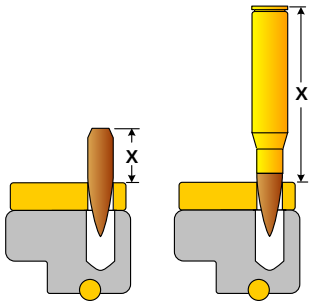

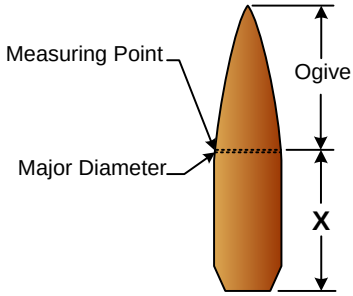

This measurement then allows you to adjust your seating die to achieve the optimum distance from the bullet ogive to the lands of the rifle. Obtaining the best bullet seating depth for a specific bullet to be used in a specific firearm significantly improves the accuracy of your loaded rounds.

Table 1. Datum Dial Ammunition Measurement System Order Guide

Order Number	Description	Use
DD1010	Datum Dial (Body with Case Dial already mounted), Storage Box 	Measures the relative distance between: • The base of a case to a datum point on its shoulder angle.
DDKIT	Kit: Datum Dial (Body with Case Dial already mounted), Bullet/Cartridge Dials #1 and #2, Storage Box. 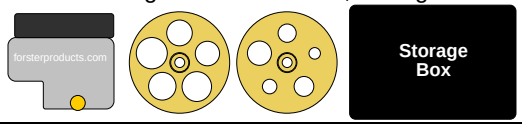	Measures the relative distance between: • The base of a case to a datum point on its shoulder. • The base of a bullet or a cartridge to a point on the bullet's ogive.
DD1111	Bullet/Cartridge Dial #1  224 Cal (5.56mm) 243 Cal (6mm) 264 Cal (6.5mm) 284 Cal (7mm) 308 Cal (7.62mm)	Measures the relative distance between: • The base of a bullet or a cartridge to a point on the bullet's ogive.
DD2222	Bullet/Cartridge Dial #2  172 Cal 204 Cal 257 Cal 277 Cal 338 Cal	
DD7777	Blank Dial with five starter holes. 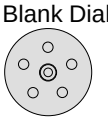	Allows you to custom-drill holes for diameters not covered by the Case Dial or the two Bullet/Cartridge Dials.

2.0 SAFETY INFORMATION

- Always wear safety glasses.

3.0 PREPARATION

1. Assemble the following:
   - Material to be measured:
     - At least five cases fired from the same firearm (known as "fire-formed" cases). Ensure they are labeled to keep them separate.
     - Batch (lot) of bullets and/or cartridges. Ensure they are from the same manufacturer.
   - A good quality caliper.

NOTICE

PROPER CASE/CARTRIDGE PREPARATION TO ENSURE ACCURATE MEASUREMENTS

- For fired cases: Use a straight-edge to check that the primer is under-flush with the case head. If primer is over-flush, deprime the case with a decapping-only die before measuring with the Datum Dial and before re-sizing.
- For newly primed cases/cartridges: Use a straight edge to ensure that the primer is under-flush and properly seated.

NOTICE

PROPER CALIPER USE

- Measurement when using a caliper is highly dependent on the skill of the operator. Use a consistent, firm touch. Too much force results in an under-indication; too little force gives an over-indication. Consult an experienced machinist for proper technique
- Ensure the caliper, as well as the item being measured, is clean and free from debris

2. Review the following definitions. They are important for understanding and using this product.

Datum

A reference plane, point or diameter that provides a base for measurements and calculations.

Headspace

The distance from the face of the closed breech of a firearm to the surface in the chamber which the cartridge case contacts (seats). This distance differs slightly from chamber to chamber, even within firearms of the same caliber.

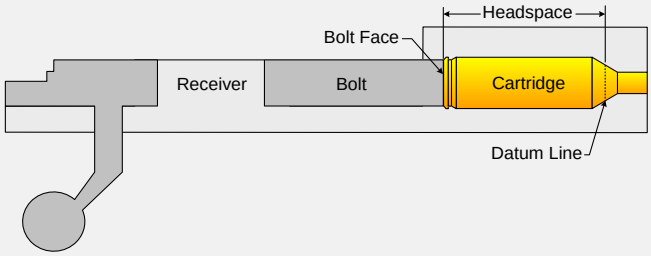

Note that excessive headspace, which is excessive linear endplay of a cartridge in the chamber with the bolt closed, allows movement of the case during firing, which can cause dangerous case stretching, case separation and gas leakage.

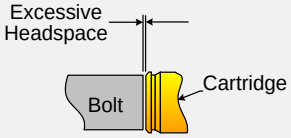

Repeatability
The variation in measurements taken by a single person or instrument on the same item and under the same conditions. A measurement is repeatable when this variation is smaller than an agreed limit. The conditions include:

- *The same measurement procedure.*
- *The same observer.*
- *The same measuring instrument (caliper), used under the same conditions.*
- *The same location.*
- *All measurements performed over a short period of time.*

4.0 CASE HEADSPACE MEASUREMENT PROCESS (Figure 3.)

Figure 3. Datum Dial Case Headspace Comparator Components



Step 1: Use Table 2 to determine the aperture/datum diameter for your case.

Step 2.
Turn the Dial (DD1010-013) so that the arrow lines up with the selected datum diameter.



Step 3.
Position the Datum Dial squarely against the movable jaw of the caliper.



Step 4.
Gently, but firmly, close the caliper on the Datum Dial. Tighten the Thumbscrew. Zero out the caliper.



Step 5.
Open the caliper. Insert the case shoulder into the selected datum diameter.



Step 6.
Rotate the case to remove slack while centering the case along the measurement axis. Ensure the case is perpendicular to the Dial. Gently, but firmly, tighten the caliper on the case head and record the measurement in Table 3.



Step 7: Measure the other four cases, record the measurements and calculate the average. *Remember: repeatability is important when taking measurements.*

Table 2. Aperture/Datum Diameters for Some Common Case Calibers

Aperture/ Datum Dia.	Case Caliber		
.330”	• 17 Rem. • 204 Ruger • 220 Swift	• 221 Fireball • 222 Rem. • 222 Rem Mag.	• 223 Rem. • 6mmx45
.350”	• 22-250 • 22 Rem. BR • 22 PPC • 225 Win.	• 6mm Rem. BR • 6mm PPC • 6mm PPC/Wild • 6mm Dasher	• 250 Sav. • 6.5mm GRENDEL
.375”	• 6mm Rem. (224) • 6x47 Lapua • 6mm XC • 25-06 Rem. • 257 Roberts • 6.5x 57 Mauser • 6.5x47 Lapua • 6.5x55	• 270 Win. • 7x57 Mauser • 280 Rem. (7mm Exp.) • 303 British • 300 H&H Mag. • 30-30 Win. • 30-40 Krag	• 30-06 Spring./61A Ackley • 32 Win. Spec.
.400”	• 243 Win. • 260 Rem. • 270 WSM	• 7mm-08 Rem. • 308 Win. • 308 National Match	
.420”	• 264 Win. • 6.5-284 • 7mm Rem. Mag • 7mm WSM • 284 Win. • 7mm STW • 7mm Rem. Ultra Mag	• 300 Win. Mag. • 30-338 Win. Mag. • 300 Ultra Mag. • 300 WSM • 8mm Rem. Mag. • 338 Win. Mag. • 375 H&H	

Table 3. Measurement Table

Fired Case	Measurement	Average Optimal Headspace (A+B+C+D+E)/5
A		
B		
C		
D		
E		

5.0 BULLET/CARTRIDGE MEASUREMENT PROCESS

Step 1. Using Table 1, choose the Dial (DD1111 or DD2222) that accommodates your bullet caliber.

Step 2. Change the Dial

1. Using the 7/64” hex wrench, unscrew the Socket Head Cap Screw (DD1010-017) and Washer (DD1010-019) on the top of the Body (DD1010-011).
2. Using the 1/16” hex wrench, loosen the Cup Point Set Screw (DD1010-018) on the bottom of the Body one turn. Remove the Case Dial (DD1010-013) and set it aside in the storage box.
3. Assemble the selected Bullet/Cartridge Dial on the Body and secure it with the Socket Head Cap Screw and Washer. Ensure the Dial is snug against the Body. Tighten the Cup Point Set Screw just enough to ensure a firm rotation of the Dial.

Step 3.
Turn the Dial so that the arrow lines up with the selected bullet diameter.



Step 4.
Using the Thumbscrew (DD1010-014), position the dial squarely against the movable jaws of the caliper.



Step 5.
Gently, but firmly, close the caliper on the Datum Dial. Tighten the Thumbscrew. Zero out the caliper.



Step 6.
Open the caliper. Insert a bullet or a cartridge into the selected bullet diameter.



Step 7.
Rotate the bullet or cartridge to remove any slack while centering the case along the measurement axis. Ensure the bullet or cartridge is perpendicular to the Dial. Gently, but firmly, tighten the caliper on the bullet or cartridge case head and record the measurement as needed.



6.0 REPLACEMENT PARTS

Every product component is available individually. A complete list of component order numbers and prices is available on our website. Go to forsterproducts.com, then click on **Components/Parts Price List.**

7.0 RESELLERS

We recommend using our Resellers when ordering our products. Their experience and knowledge will help you select the best products that meet your specific requirements. In addition, they usually offer the best prices and convenient delivery options.

To find a Reseller, go to forsterproducts.com, then click on **Locate a Reseller**. If your Reseller cannot supply you, please contact Forster Products directly.

WARRANTY
All Forster Products are warranted against defects in materials and workmanship for the life of the product. Parts which, by nature of their function, are subject to normal wear (such as springs, pins, etc.) and parts which have been altered, abused or neglected, are excluded from the warranty. If the product is deemed defective by workmanship or materials, it will be repaired, reconditioned or replaced (at Forster Product’s option). This warranty supersedes all other warranties for Forster Products whether written or oral.