GEISSELE®
AUTOMATICS

We Manufacture Confidence®

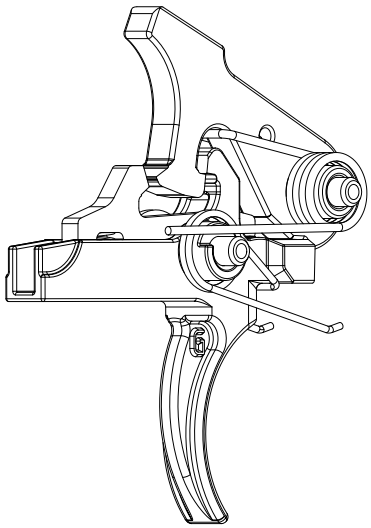

SUPER SEMI-AUTOMATIC ENHANCED

SSA-E TRIGGER

Installation Instructions

READ THIS FIRST

Firearm safety is **YOUR** responsibility. You must memorize and put into practice the 4 Rules of Firearm Safety:

1. **ASSUME EVERY WEAPON IS LOADED.**
2. **KEEP YOUR FINGER OFF THE TRIGGER UNTIL YOU ARE READY TO SHOOT.**
3. **DO NOT LET THE MUZZLE POINT AT ANYTHING YOU ARE NOT WILLING TO DESTROY.**
4. **KNOW YOUR TARGET AND WHAT IS BEYOND.**

Geissele Automatic's Super Semi-Automatic Enhanced provides enhanced trigger control and weapon accuracy while maintaining the robustness and reliability of our combat-proven two-stage trigger.

The SSA-E's reduced first and second stage pull weights result in a trigger with a smooth, light first stage take-up and a crisp, candy cane-like second stage break. The SSA-E is ideal for use in precision Squad Designated Marksman type rifles where weapon accuracy and reliability are critical and a non-adjustable drop in trigger is desired

The SSA-E Trigger will lighten the trigger pull relative to a standard trigger. This lightened trigger pull will make the firearm easier to discharge. You must recognize and accept this fact before installing this trigger. If you do not want a lighter than standard trigger pull or are not willing to accept responsibility for the safety of your firearm, yourself, and those around you, do not install this trigger.

Geissele Automatics recommends installation by a certified gunsmith only

INSTALLATION INSTRUCTIONS

1. Unload rifle and make safe.
2. Remove existing trigger and clean receiver. It is not necessary to remove the safety.
3. Remove the trigger pin from the trigger and replace with the slave pin to hold the disconnector in place.
4. Install trigger and slave pin into rifle. Align slave pin with receiver pin holes. Insert trigger pin into receiver, through trigger/disconnector, and into receiver on opposite side.
5. Remove hammer pin from hammer. Place a drop of lubricant in the bore of the hammer pivot.
6. Install hammer into receiver with hammer spring legs **on top of the trigger pin**. Insert hammer pin into receiver, through hammer, and into receiver on opposite side.
7. Apply a small amount of lubricant in the following locations as shown on reverse side this page:
   a. Each side of the disconnector above the trigger pin
   b. Hammer and trigger sears
   c. Face of the disconnector
   d. Hammer tail where it contacts the disconnector;
   e. Top of each side of the hammer spring where the spring contacts the receiver wall.
8. Check safety operation: With the hammer cocked and the safety selector set to the SAFE position, pull the trigger hard. The hammer should not fall.
9. Check trigger reset: Set safety selector to FIRE. Dry fire weapon and keep trigger held back. Pull charging handle all the way back and release, letting the bolt carrier snap forward. The hammer should not fall. Release trigger. Hammer should be caught by the trigger.
10. Check for the presence of a second stage: Set the safety selector to FIRE. Pull the trigger through the first stage until it comes to a distinct stop—this is the second stage. Applying additional pressure to the trigger will allow the weapon to discharge.

Maintenance of the Geissele triggers consists of occasionally placing a drop of lubricant on the locations shown in #7 above. Recommended lubrcant is CLP or equivalent; alternatively a high quality grease may be used on the trigger/hammer sears and disconnector contact surfaces.

When the trigger and lower receiver well become very dirty (such as when firing with a suppressor), it is not always necessary to remove the trigger group for cleaning. Spray down the trigger group with electrical contact cleaner to remove residual oil and dirt. Next, use compressed air to blow off the trigger group and then flush liberally with a light lubricant as CLP or equivalent. Blow off excess lubricant with compressed air and lubricate as noted above.

Thank You For Your Purchase.
Contact Geissele Automatics with any questions.

GEISSELE AUTOMATICS *• 800 NORTH WALES RD • NORTH WALES, PA 19454*
TEL: *610-272-2060 |* ***FAX:*** *610-272-2069*
E-MAIL: *INFO@GEISSELE.COM |* ***WEB:*** *WWW.GEISSELE.COM*
PATENTS: *WWW.GEISSELE.COM/PATENTS*
GEISSELE AUTOMATICS SSA-E TRIGGER INSTRUCTIONS REVISION 11 - 04/22/15

GEISSELE®
AUTOMATICS

SUPER SEMI-AUTOMATIC
ENHANCED
(SSA-E)

For the M16/M4/AR15/AR10 weapon family
U.S. Pat. 7,600,338

