MEPROLIGHT®

SK GROUP MEMBER

MEPRO TRU-VISION™ SR
MEPRO TRU-VISION™

Red Dot Sight

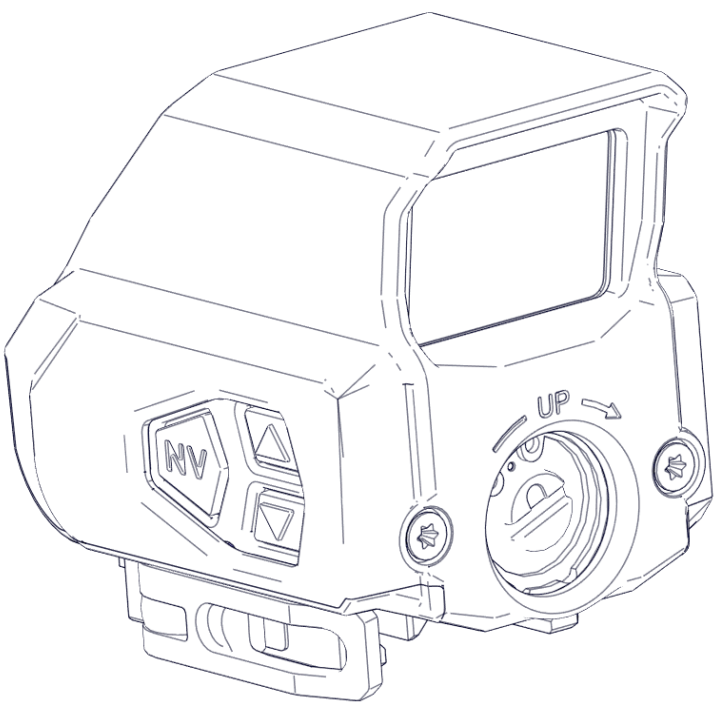

USER MANUAL

Copyright

Copyright© by Meprolight®.

This document contains information which is the sole proprietary of Meprolight® (1990) Ltd. ("Meprolight®"). Disclosure of this document to the recipient does not grant to the recipient any title, rights, licenses, or other intellectual property right other than to use the information for the purpose agreed in writing by Meprolight® and the recipient. The information contained in this document, including technical data, specifications, drawings, product, and commercial information etc. may not be duplicated, copied, or disclosed, in whole or in part, without prior written permission of Meprolight®.
The Information contained in this document is provided in good faith, however, it is delivered "as is" and no warranty or representation is given or to be implied by Meprolight® as to the completeness, accuracy, merchantability, or suitability for any particular purpose of any information or data disclosed hereunder. Meprolight® may change the information contained in this document at its sole discretion without prior notification to the recipient.

Table of Contents

1. MEPRO TRU-VISION™ Advantages 1
Highlighted Features 2
Kit Contents 3
2. Main Components 5
3. Modes of Operation 9
Power-On & Off 9
Reticle Selection (TRU-VISION™ SR Version Only) 10
Brightness Adjustment 11
NV Mode 11
Automatic Brightness Adjustment 12
Sleep Mode 13
Auto Power-Off (TRU-VISION™ Models) 13
4 Hours Auto Power-Off 13
8 Hours Auto Power-Off 14
Auto Power-Off (TRU-VISION™ SR only) 14
4 Hours Auto Power-Off 14
8 Hours Auto Power-Off 15
Auto Power-Off deactivated 15

5. Operational Troubleshooting 17

6. Operational Maintenance 21

Cleaning 21

Top Cover (Armor) Replacement 22

Removal 23

Installation 23

7. Technical Specifications..... 25

List of Figures

Figure 1: Keypad.....9
Figure 2: Reticle Selection 10
Figure 3: Automatic Brightness Adjustment 12
Figure 4: Top Cover (Armor) Replacement.....22

1. MEPRO TRU-VISION™ Advantages

The Mepro TRU-VISION™ is optimized for modern weapon platforms. Its short-length and lightweight design addresses the need for co-mounting several tactical devices on today's weapon rail (e.g. laser pointer, NVGs, etc.).

Mepro TRU-VISION™ is equipped with a light sensor and automatic brightness control system, enabling clear visibility of the reticle in any lighting conditions. It has an integrated motion sensor ("Shake Awake") and configurable sleep time of 4 or 8 hours for extended operation time.

Mepro TRU-VISION™ SR version features interchangeable reticles tailored for various tactical needs. You can switch from a dot reticle designed for long-range use to a Speed Ring reticle suited for short-range or speed-critical scenarios.

Highlighted Features

- Selectable 2/65 MOA Speed Ring or 2 MOA dot reticle (TRU-VISION™ SR version).
- Manual or automatic brightness control (Built-in-light sensor).
- 12 Daytime/4 NVD brightness settings.
- 1.93" Height over bore for use with lights and lasers mounted at the 12 o'clock position.
- Compact, lightweight, ergonomic design
- Large, non-reflective display window
- Adjustable 4/8 hour sleep mode with shake awake feature.
- MIL-STD qualified.

Kit Contents

Description	Qty
MEPRO TRU-VISION™ or TRU-VISION™ SR	1
Cleaning kit	1
User manual	1
8mm Socket Wrench (optional)	1
Field Cover	1

2. Main Components

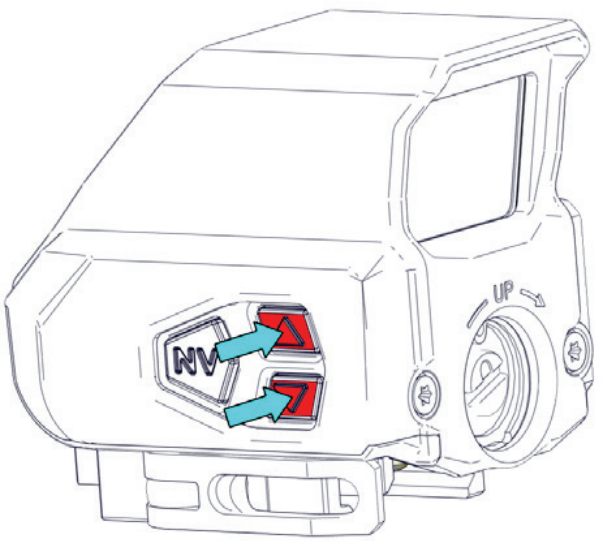

Keypad Buttons

- To power on, click the UP △ button.
- To power off, press and hold the DOWN ▽ button for over 3 seconds.

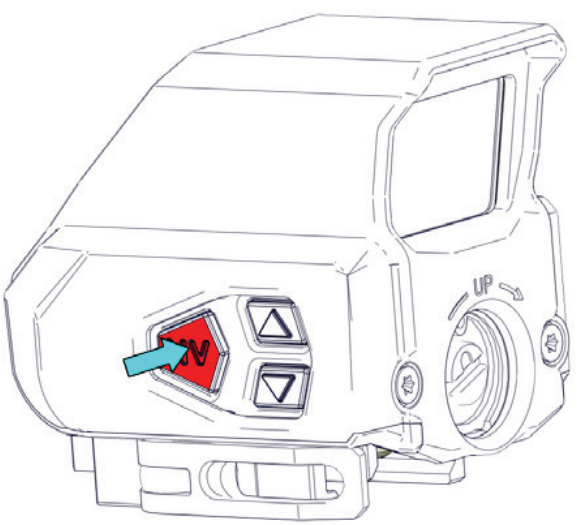

- To toggle between Day mode and NV (Night Vision) mode, press and hold the NV button for over 3 seconds.

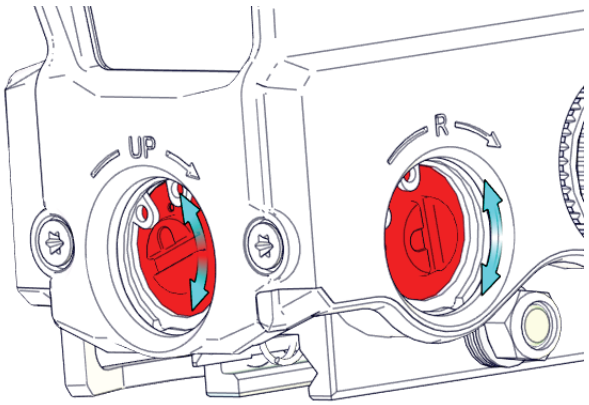

Elevation and Windage Adjusters
Two screws enabling 0.5 MOA per click adjustment.

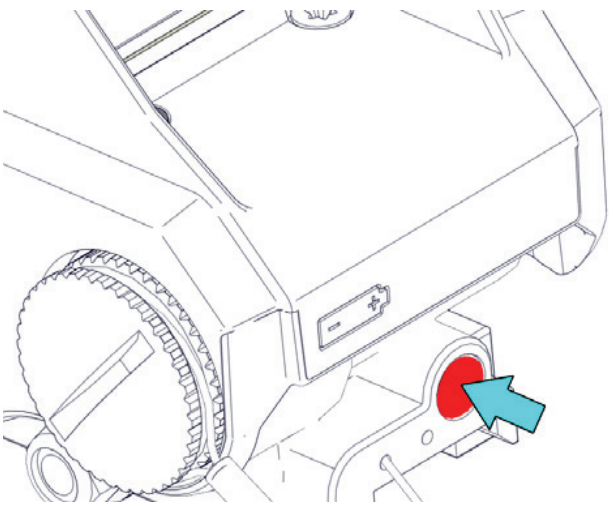

Light Sensor Window
This sensor enables automatic reticle brightness adjustment.
NOTE: For proper functionality, keep the sensor window clean.

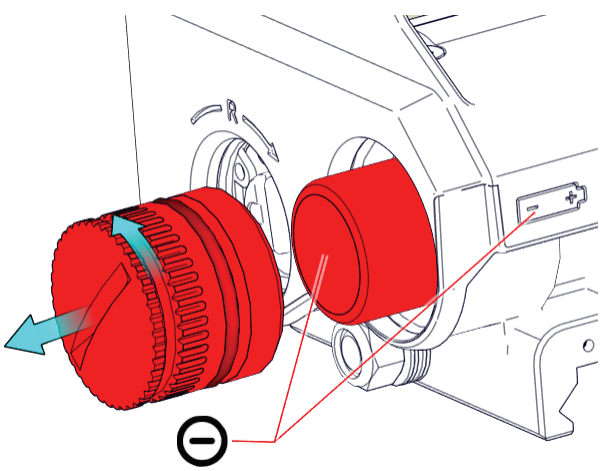

Battery Compartment
Accepts a single CR123 battery.
NOTE: See battery symbol for correct battery polarity.

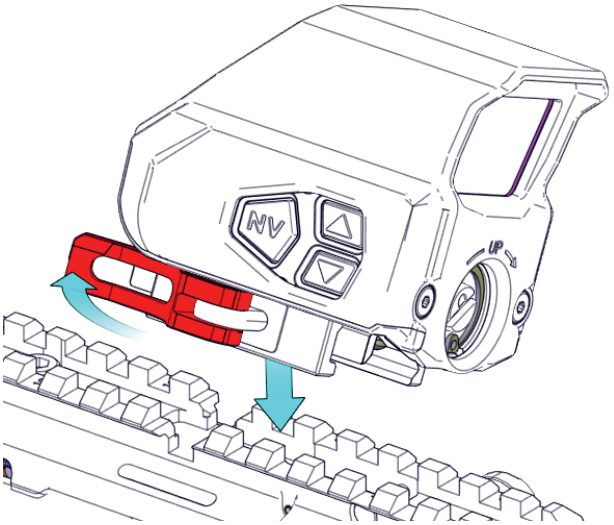

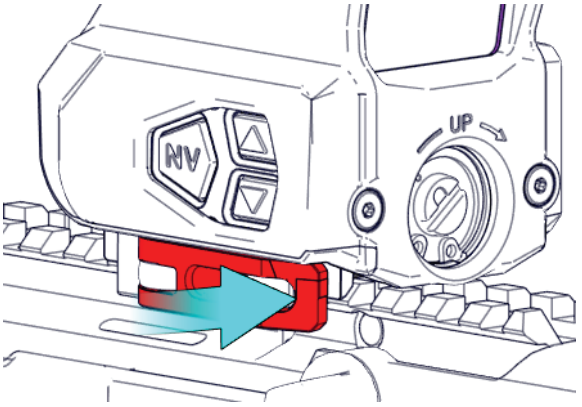

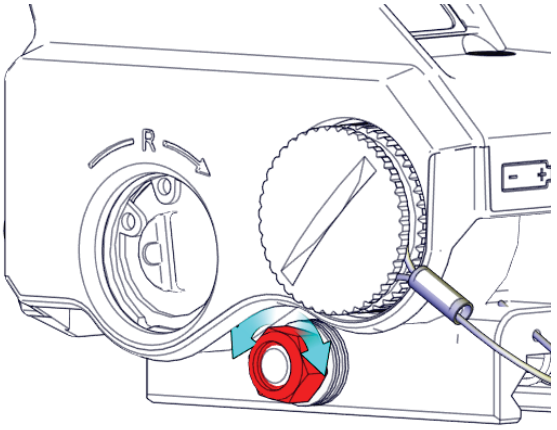

Mounting on a weapon

- Pull the lever* to the fully open position.
- Tilt the sight and attach the right side to the rail first.
- Tighten (close) the lever.
- If the lever closing feels too loose or too firm, use an 8mm socket wrench to adjust the nut. Tight it until the sight is firmly positioned on the rail, but you can still open the lever with your hands.

3. Modes of Operation

Power-On & Off

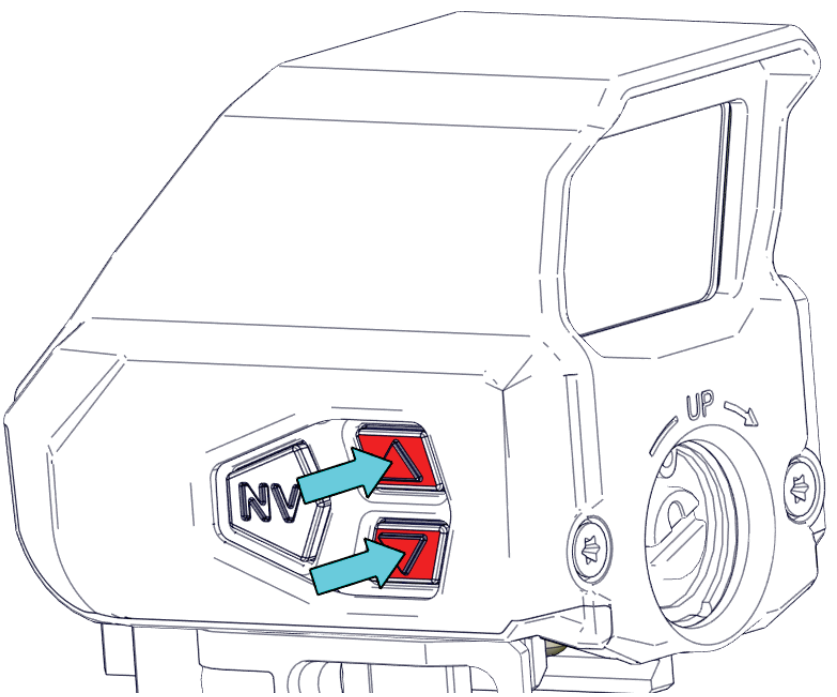

Figure 1: Keypad

- To power on, click the UP △ button.
- To power off, press and hold the DOWN ▽ button for over 3 seconds.

Reticle Selection (TRU-VISION™ SR Version Only)

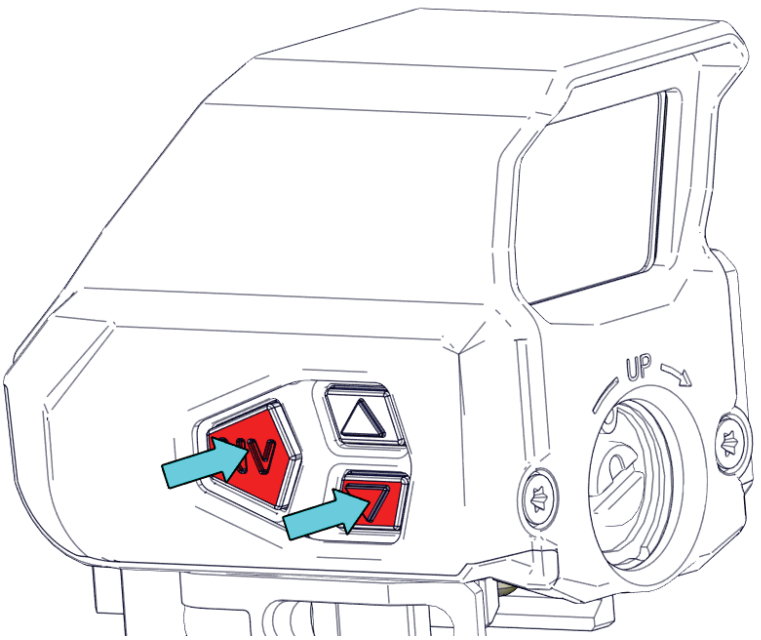

Figure 2: Reticle Selection

- Press and hold the DOWN ▽ and NV buttons for over 4 seconds.
- After 4 seconds, when the aiming dot blinks rapidly, release both buttons.
- Press the UP △ or DOWN ▽ buttons to cycle between dot reticle and a Speed Ring reticle.

- To set your selection, press and hold the DOWN ▽ and NV buttons for over 4 seconds.

Brightness Adjustment

NOTE: Manual mode is the default when you power ON the sight.

- Click the UP △ and DOWN ▽ buttons to adjust the reticle brightness.
- In DAY mode, there are 12 brightness levels.

NOTE: The default brightness setting after power ON is level #8.

NV Mode

- Press and hold the NV button for over 3 seconds to toggle between Day and NV modes.
- Click the UP △ and DOWN ▽ buttons to toggle between 4 reticle brightness levels.

NOTE: In NV mode, the reticle is darker than in DAY mode for compatibility with night vision devices. In NV mode, there is no Auto mode.

Automatic Brightness Adjustment

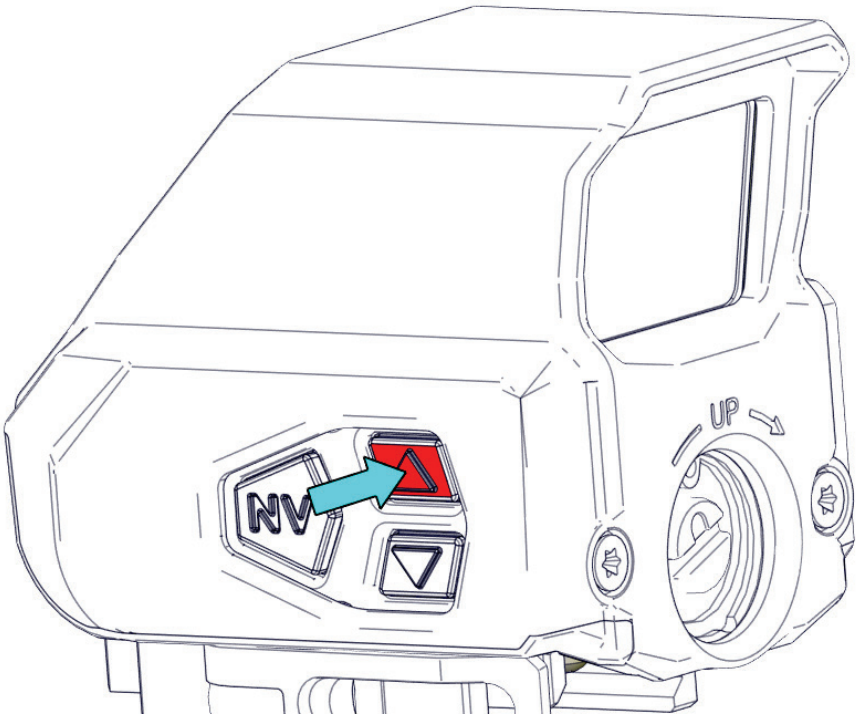

Figure 3: Automatic Brightness Adjustment

- Press and hold the UP button for 3 seconds to switch to Auto mode.
- The reticle will blink three times to indicate Auto mode is active.
- In Auto mode, the reticle intensity constantly varies according to ambient light conditions.
- To disengage Auto mode, click the UP or DOWN button.

Sleep Mode

- The TRU-VISION™ is set to go into sleep mode after approx. 30 minutes of no movement and when no button is pressed.
- To exit sleep mode: Move ("Shake Awake") the TRU-VISION™, or press any button.

Auto Power-Off (TRU-VISION™ Models)

- The TRU-VISION™ is factory set to power off automatically after 8 hours of inactivity (no button is pressed).
- You can set the TRU-VISION™ to power-off after either 4 or 8 hours:

4 Hours Auto Power-Off

  - Press and hold the NV and DOWN ▽ buttons together.
  - Release the buttons.
  - When the reticle flashes 4 times, the Auto power-off is set to 4 hours.

8 Hours Auto Power-Off

- Press and hold the NV and UP △ buttons together.
- Release the buttons.
- When the reticle flashes 8 times, the Auto power-off is set to 8 hours.

Auto Power-Off (TRU-VISION™ SR only)

- The TRU-VISION™ is factory set to power off automatically after 8 hours of inactivity (no button is pressed).
- You can deactivate the Auto power-off or set it to 4 or 8 hours:

4 Hours Auto Power-Off

- Press and hold the NV and UP △ buttons together for over 4 seconds.
- Release the buttons.
- When the reticle flashes 4 times, the Auto power-off is set to 4 hours.

8 Hours Auto Power-Off

- Press and hold the NV and UP △ buttons together.
- Release the buttons.
- When the reticle flashes 8 times, the Auto power-off is set to 8 hours.

Auto Power-Off deactivated

- Press and hold the NV and UP △ buttons together.
- Release the buttons.
- When the reticle flashes 2 times, the Auto power-off is deactivated.

4. Operational Troubleshooting

Problem	Cause	Solution
The reticle doesn't illuminate	The TRU-VISION™ is powered off	Power-on
	Reticle intensity is too low	Press the "Up" button to increase the reticle intensity
	The battery is depleted	Replace battery
	“Sleep Mode” activated after more than approx. 30 minutes without pressing any button or moving the sight	Press any button or move ("Shake Awake") the sight

Problem	Cause	Solution
(Cont.) The reticle doesn't illuminate	“Auto Power-Off” engaged after 4 or 8 hours in “Sleep mode”	Power-on
	Reticle intensity is too low (in NV mode)	Press and hold the NV button for over 3 sec. to toggle between Day and NV modes
The reticle blinks every few minutes	Low battery alert	Replace battery
The reticle blinks continuously	Critical battery alert	

Problem	Cause	Solution
Auto-Brightness feature doesn't work	The Light Sensor Window is dirty or blocked	Clean the window or remove any obstruction
	When adjusting the Brightness level manually, the Auto-Brightness feature is disabled	To restore the Auto-Brightness feature, press and hold the UP △ button for over 3 seconds

5. Operational Maintenance

- The TRU-VISION™ should not be operated or stored outside the specified temperature range. See Ch. 7 Technical Specifications.
- An unauthorized attempt to disassemble or repair the TRU-VISION™ will void the manufacturer's warranty.
- After every use, verify that the system is switched off.

Cleaning

- Do not touch the optical surfaces other than for cleaning purposes.
- Before and after every use, check the optical surfaces for cleanliness and clean if required.
- Light Sensor Window: for proper functionality, keep the sensor window clean.

- Clean the optical surfaces with the lens cloth provided with the TRU-VISION™.
- Exceptionally dirty glass surfaces may be cleaned with a lens cleaning fluid.

Top Cover (Armor) Replacement

Description	Quant.
Screw: M3x5 Stainless Steel 6Lobe Button Head Screw, ISO 7380 Torx	4
Threadlocker: LOCTITE® 242®	As Required

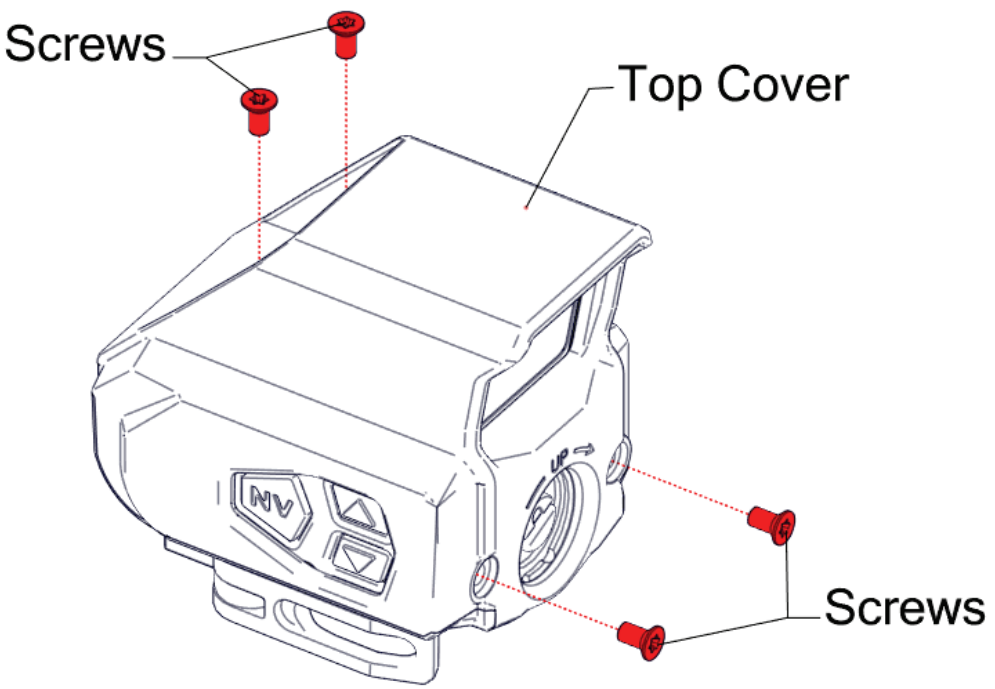

Figure 4: Top Cover (Armor) Replacement

Removal

- Unscrew and remove the Battery cap.
- Remove the Battery.
- Remove the four screws securing the Top Cover. Use a Torx T8 screwdriver.
- Pull the Armor upwards to remove it.

Installation

- Carefully install the Armor straight down into place. Ensure the Armor is seated fully, and the holes align with the threaded holes on the body.

CAUTION: Do not touch the optical surfaces of the Mepro TRU-VISION™.

- Apply a drop of LOCTITE® 242® threadlocker* on the thread of the four new screws in this kit.
- Install the four screws and tighten them to 2.21 in-lb (25 Ncm).
- Install the Battery.
- Screw in the battery cap. Tighten the cap until it is snug.

6. Technical Specifications

Window Size	1.14" X 0.78" (29 X 20 mm)
Field of View (FOV)	Unlimited
Click size (MOA per click)	0.5
Zeroing Knobs	Elevation, Windage
Reticle Brightness	16 Brightness levels: 12 Day time; 4 Night vision
Water Immersion Rating	10m for 1 Hour
Sleep Mode	Approx. 30 minutes without pressing any button or moving the sight

Auto Power Off	After 4 or 8 hours in "Sleep Mode"
Working Temperature Range	-40°F to 160°F (-40°C to 71°C)
Storage Temperature Range	-40°F to 160°F (-40°C to 71°C)
Battery Type	CR123
Operation Time	>5000h (@medium brightness setting)
Low Battery Indication	50 hours before depletion
Critical Battery Indication	5 hours before depletion
Weight	<10.2 ounces (<290 grams)
Dimensions (LxWxH)	3.07" X 2.28" X 2.71" (78 X 58 X 69 mm)

NOTE: Specifications are approximate and subject to change without notice. Due to certain countries' restrictions and regulations, some product configurations may not be available for sale in your country.

MEPROLIGHT®

SK GROUP MEMBER

For inquiries, please contact:

USA

e-mail: sales@meprolight.us

e-mail: support@meprolight.us

www.meprolight.com

International (Except The USA)

e-mail: sales@meprolight.com

e-mail: support@meprolight.com

www.meprolight.com

Rev. I, Feb. 2025 P/N: 650209000042