TRUGLO®

WHEN BRIGHTNESS COUNTS®

PRODUCT: 4X32MM COMPACT CROSSBOW SCOPE (TG8504B3L, TG8504B3, TG8504C3)

WARNING: Serious bodily injury, death, or property damage can occur if this product is not installed and used properly.

INSTRUCTIONS:

Congratulations on the purchase of your new TRUGLO® scope. The 4x32mm Compact provides a sharp image in a lightweight platform. Shorter than traditional scopes, the 4x32mm Compact is ideal for the shorter rail found on most crossbows.

- Water-resistant / fogproof / nitrogen gas-filled
- Specially formulated multi-coating provides maximum brightness, clarity, and contrast
- Fingertip-adjustable windage and elevation turrets
- Drop-compensating, range finding reticle
- Fast-focus eyepiece
- Durable, scratch-resistant, non-reflective matte finish
- Elastic lens cover included
- Scope rings included

MOUNTING
To get the best performance from your scope, it must be mounted properly. If you are not familiar with the process of mounting a scope, it is strongly recommended that you seek the assistance of a qualified professional.

Your 4x32mm compact scope comes with standard rings designed to fit Picatinny or Weaver-style rails. If your crossbow uses 3/8 in. (11mm) rings (some Barnett® models, for example), different rings or a rail adapter (TG8953B) will be needed. Mount the included scope rings to the rail of the crossbow. Improperly installed rings or bases will negatively affect accuracy. Loosely test-fit the scope inside the rings to check clearance and fit. Generally, it is best to mount the optic as far forward as possible, but this may vary based on the stock and rail length of your crossbow.

Slightly loosen the screws on the top of the rings (do not remove completely). At this time, eye relief adjustments can be made by sliding the scope forward or back within the rings. From a comfortable shooting position, test the eye relief.

Gently nudge the scope forward or back accordingly. Rotate the scope to achieve proper level/alignment. It is recommended that you use two leveling instruments: a plumb-bob and a bubble level, or two bubble levels. After proper level and position have been achieved, carefully re-tighten the screws. Tighten each screw the same amount (example: 1 turn) while alternating screws until tight. DO NOT OVER-TIGHTEN (recommended torque is 20 in-lbs or 1.6 ft-lbs). This ensures that the optic is held firmly in all positions for accuracy and reliability.

ZEROING–CROSSBOW SCOPES
After the scope and mount are installed properly, the scope can now be zeroed to the crossbow. Crossbow scope models utilize protective turret caps that cover the windage and elevation turret adjustment dials. Unscrew the caps to make an adjustment. Your scope is designed for a 20-yard zero using the central crosshair. None of the other lines need to be referenced to achieve a 20-yard zero.

With your target placed at 20 yards, safely fire a shot. Evaluate the point of impact of the bolt. Adjust the scope turrets accordingly. Each click of the windage or elevation turret moves the point of impact 1/2-MOA (Minute of Angle), or approximately .10 in. at 20 yards. The direction indicated on the dial is the direction of movement of the point of impact. Using the average of a group of shots (rather than a single shot) may yield a more accurate adjustment and eliminate the slight differences between individual crossbow bolts.. After your 20-yard zero has been established, replace the turret caps.

The additional subtensions (hold-over lines) in your scope provide references for longer distances. After achieving a precise 20-yard zero with the central crosshair, gradually move back to determine the correct distance of the additional lines. These lines approximate 20, 30, 40, and 50 yard hold-over for many crossbows, but the exact distance will depend on the speed of the bolt and other variables. The exact distance will vary based on the speed of the bow model and the type of bolt being used. Always start at closer distances and move back in small increments to reduce the risk of overshooting your target or losing a bolt.

525 INTERNATIONAL PARKWAY
RICHARDSON, TEXAS 75081
P# 972.774.0300
F# 972.774.0323

WARNING: This product can expose you to chemicals including chromium, which is known to the State of California to cause cancer and birth defects or other reproductive harm. For more information go to www.P65Warnings.ca.gov.

ART19A29JL

TRUGLO®

WHEN BRIGHTNESS COUNTS®

PRODUCT: 4X32MM COMPACT CROSSBOW SCOPE (TG8504B3L, TG8504B3, TG8504C3)

WARNING: Serious bodily injury, death, or property damage can occur if this product is not installed and used properly.

CROSSBOW RANGE FINDER BDC RETICLE
A Bolt Drop-Compensating Reticle (BDC) is designed to compensate for the effect of gravity upon your bolt through multiple distances. BDC reticles can account for gravity, but not other factors such as wind or shooting angle. The BDC is not always an exact aiming solution in all instances, but provides a helpful reference through various distances.

The Range Finder reticle is optimized for hunting whitetail deer. Measuring a deer from the shoulder to the hind leg can be used to estimate the range of a deer (or similarly sized target). NOTE: when these lines are used for range estimation, they are always 20, 30, 40, and 50 yards, regardless of the speed of the bow. For a firing solution, use the BDC references as outlined in the previous "ZEROING" section of this manual.

NOTE: This is NOT proper shot placement on a deer. This illustration is for range estimation only.

ILLUMINATION CONTROL
Illuminated reticles are available on many TRUGLO scopes including the TG8504B3L.
The etched reticle can be illuminated in red or green, as well as used in black without illumination. Simply rotate the illumination control dial in either direction to select the desired brightness level. Always select the lowest brightness setting that provides good contrast against the target. The higher brightness settings should only be used in bright daylight (otherwise, the reticle may appear distorted). Turn the illumination system to the zero (off) position after use to conserve battery power.

FOCUS/PARALLAX
Your scope utilizes a fixed-focus that does not need to be adjusted. This model is set to have minimum parallax at 50 yards. Objects viewed far beyond 100 yards may appear slightly less sharp than closer objects—this is normal for all fixed-focus scopes and does not affect the precision of the crosshairs, nor the alignment of the scope. When shooting at distances far beyond 50 yards, keep the reticle centered in the scope to minimize observed parallax shift.

FOCUS ADJUSTMENT–DIOPTER
Your scope features a diopter adjustment to optimize the focus of the optic for individual vision. The diopter adjustment wheel determines the focus inside of the optic, ensuring the reticle is in sharp focus for maximum clarity and accuracy. Proper adjustment is based on individual eyesight, and will vary from one individual to another. Adjusting the diopter will marginally change the magnification of the optic. This will not have a significant effect on the subtension measurements of the reticle.

ELASTIC SCOPE COVER
Your 4x32mm Compact scope comes with an elastic protective cover. It is recommended to keep the cover on your scope at all times when not in use to protect the optic and lenses from dust, moisture, and scratches.

MAINTENANCE AND CLEANING
Although your TRUGLO scope is very durable, it is a precision instrument and should be treated with care. It is recommend to store precision rifles and optics in a hard-sided case. Lenses: If the lens become dirty, blow loose dust/dirt off the lenses before cleaning. Use lens cleaning fluid and a soft cloth to dab at the surface to remove potentially abrasive bits of dirt or dust before applying more pressure. Be patient and clean in gradual stages. Too much pressure can grind abrasive debris into the lens, damaging the optical coatings. The optical coatings are very durable and will last indefinitely as long as proper care is taken in the cleaning process. Exterior: The body of the scope and mount can be wiped down to remove dust, oils, fingerprints, etc. On all riflescopes, solvents should not be used, as they could potentially damage some components of your scope—including the finish of the scope and the internal grease that keeps adjustment knobs turning smoothly.

525 INTERNATIONAL PARKWAY
RICHARDSON, TEXAS 75081
P# 972.774.0300
F# 972.774.0323

⚠WARNING: This product can expose you to chemicals including chromium, which is known to the State of California to cause cancer and birth defects or other reproductive harm. For more information go to www.P65Warnings.ca.gov.

ART19A29JL

TRUGLO®

WHEN BRIGHTNESS COUNTS®

PRODUCT: 4X32MM COMPACT CROSSBOW SCOPE (TG8504B3L, TG8504B3, TG8504C3)

WARNING: Serious bodily injury, death, or property damage can occur if this product is not installed and used properly.

TRU·CARE
LIMITED LIFETIME WARRANTY

TRUGLO, Inc. warrants this product to be free from original defects in materials and workmanship for as long as the product is owned by the original retail purchaser, subject to the limitations set forth herein. This warranty applies only to the original retail purchaser and requires the purchaser to supply a copy of the original proof of purchase (original sales receipt) at the time warranty service is requested. No additional warranty "registration" is required. If this product should malfunction or fail, contact us for a Return Merchandise Authorization (RMA) number. The RMA number should be clearly marked on the outside of the package. Please include a complete description of the problem, your name, address, telephone number and a copy of the original proof of purchase. All transportation, insurance, and freight charges associated with warranty service and repairs are the responsibility of the purchaser. Please include a check or money order in the amount of $12.50 to cover processing and return postage. If an original defect is found by us, we will, at our option, repair, replace, or make appropriate adjustment. To contact us go to www.truglo.com or call 972-774-0300. This Limited Warranty does not apply to: (a) asserted defects caused by normal wear and tear of any part including knobs, camouflage finish, etc.; (b) asserted defects caused by modification, unauthorized service, accidents, neglect, misuse, abuse, improper maintenance, acts of Nature; (c) asserted defects involving subjective personal likes or judgments; (d) batteries; (e) electronic components; or (f) products purchased outside the USA.

The ELECTRONIC COMPONENTS in this product are warranted to be free of defects in materials and workmanship for THREE YEARS from the date of purchase. If during this three-year period, the electronic components should malfunction or fail, the above protocol should be followed. If an original defect is found by us, we will, at our option, repair, replace, or make appropriate adjustment.

THIS LIMITED WARRANTY IS THE EXCLUSIVE WARRANTY FOR THIS PRODUCT. WE DISCLAIM ANY AND ALL OTHER WARRANTIES OF ANY KIND, EXPRESS OR IMPLIED, INCLUDING ANY WARRANTIES OF FITNESS FOR A PARTICULAR PURPOSE OR OF MERCHANTABILITY. WE SHALL NOT BE LIABLE IN TORT, INCLUDING NEGLIGENCE OR STRICT LIABILITY, AND SHALL HAVE NO LIABILITY AT ALL FOR INJURY TO PERSONS OR PROPERTY. OUR LIABILITY FOR FAILURE TO FULFILL ANY OBLIGATION UNDER THIS LIMITED WARRANTY OR ANY OTHER LIABILITY IN CONNECTION WITH THIS PRODUCT SHALL BE LIMITED TO THE AMOUNT OF THE PURCHASE PRICE RECEIVED BY US FOR THE PRODUCT. THE REMEDIES STATED IN THIS LIMITED WARRANTY ARE THE PURCHASER'S EXCLUSIVE REMEDIES AGAINST US REGARDING THIS PRODUCT. UNDER NO CIRCUMSTANCES SHALL WE BE LIABLE FOR ANY INDIRECT, INCIDENTAL, SPECIAL OR CONSEQUENTIAL DAMAGES, INCLUDING LOST PROFITS AND REVENUES, INCONVENIENCE, OR INTERRUPTIONS IN OPERATIONS, OR ANY OTHER COMMERCIAL OR ECONOMIC LOSSES OF ANY KIND. THESE LIMITATIONS AND DISCLAIMERS ARE NOT MADE BY US WHERE PROHIBITED BY LAW. SOME STATES PROHIBIT LIMITATIONS OF WARRANTIES AND THE PURCHASER MAY HAVE ADDITIONAL RIGHTS IN THOSE STATES.

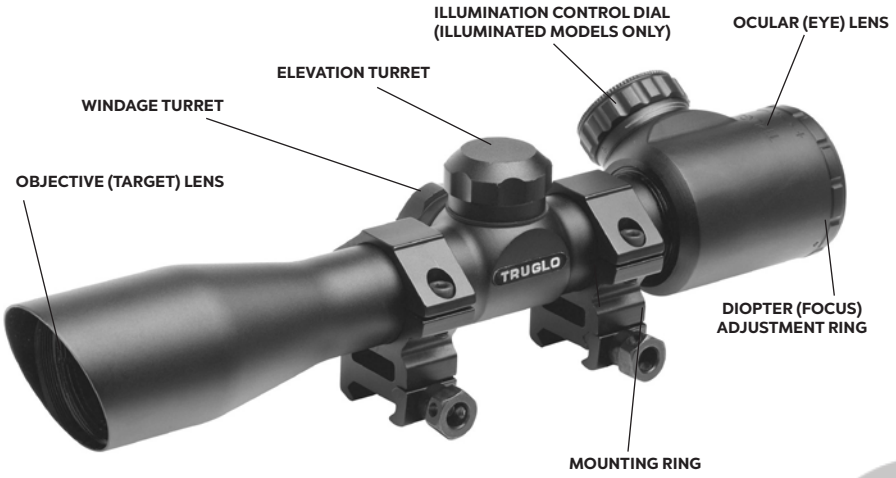

525 INTERNATIONAL PARKWAY
RICHARDSON, TEXAS 75081
P# 972.774.0300
F# 972.774.0323

WARNING: This product can expose you to chemicals including chromium, which is known to the State of California to cause cancer and birth defects or other reproductive harm. For more information go to www.P65Warnings.ca.gov.

ART19A29JL